Engine	WeiChai WP6G125E201
Gross Power	92 kW (123 hp) @ 2,000 rpm
Net Power	85 kW (114 hp) @ 2,000 rpm
Operating Weight	11,000 kg
Standard Bucket Size	2.3 m^3
Standard Breakout Force	89 kN
Standard Dump Clearance	2,620 mm

835H

WHEEL LOADER

LiuGong

TOUGH WORLD. TOUGH EQUIPMENT.

835H SPECIFICATIONS >>>

ENGINE	
Emission Regulation	Tire 2 / Stage II
Make	WeiChai
Model	WP6G125E201
Gross Power	92 kW (123 hp) @ 2,000 rpm
Net Power	85 kW (114 hp) @ 2,000 rpm
Peak Torque	560N.m@1200~1400rpm
Displacement	6.75L
Number of Cylinder	6
Aspiration	Turbocharged & Air-to-air intercooled

TRANSMISSION	
Transmission Type	Planetary, power shift
Torque Converter	Double stage, four elements
Maximum Travel Speed, fwd	37 km/h
Maximum Travel Speed, rev	15. 5 km/h
Number of Speed, fwd	2
Number of Speed, Rev	1

AXLES	
Differential Front Type	Conventional
Differential Rear Type	Conventional
Axle Oscillation	±11°

STEERING	
Steering Configuration	Articulated
Steering Relief Pressure	17.2 MPa

BRAKES	
Service Brake Type	Caliper discs brake
Service Brake Actuation	Air over hydraulic
Parking Brake Type	Flexible shaft control
Parking Brake Actuation	Mechanical

HYDRAULIC SYSTEM	
Main Pump Type	Gear
Main Relief Pressure	18 MPa
Raise	4.7 s
Dump Time	1.0 s
Float Down Time	3.1 s
Fastest Total Cycle Time	8.8 s

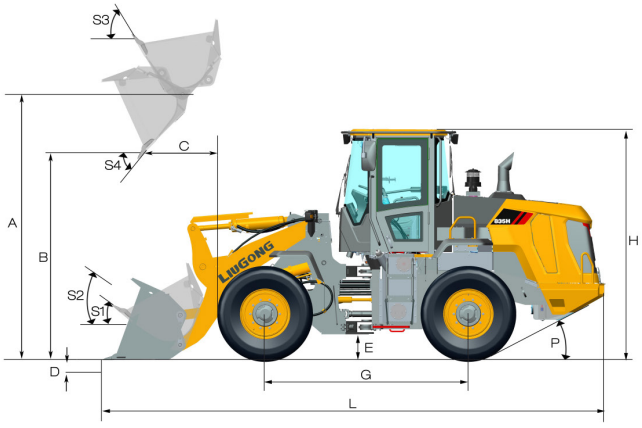

LOADER ARM PERFORMANCE	
Tipping Load - Straight	7,800 kg
Tipping Load – Full Turn	6,700 kg
Bucket Breakout Force	89 kN
A Maximum Hinge Pin Height	3,730 mm
B Dump Clearance at Full Height Discharge	2,620 mm
C Dump Reach at Full Height Discharge	1,200 mm
D Maximum Digging Depth, Bucket Level	40 mm
S_1 Rollback at Ground Level	41°
S_2 Bucket Rollback at Carry	48°
S_3 Bucket Rollback at Maximum Height	61°
S_4 Maximum Dump Angle at Full Height	45°

BUCKET PERFORMANCE	
Reference Bucket	2.3 m^3

DIMENSIONS	
E Ground Clearance	345 mm
G Wheelbase	2,870 mm
H Cab Height	3,232 mm
J Wheel Tread	1,850 mm
K Width Over Tires	2,300 mm
L Length with Bucket Down	7,270 mm
M Turn Angle, Either Side	40°
P Rear Angle of Departure	29°
R_1 Turning Radius, Bucket Carry	5,600 mm
R_2 Turning Radius, Outside of Tire	5,090 mm
W Overall Width	2,660 mm

TIRES	
Tire Size	17.5 - 25

OPERATING WEIGHTS	
Operating Weight	11,000 kg

SERVICE CAPACITY	
Fuel Tank	140 L
Engine Oil	18 L
Cooling System	35 L
Hydraulic System	88 L
Transmission and Torque Converter	45 L
Axles, Each	16 L

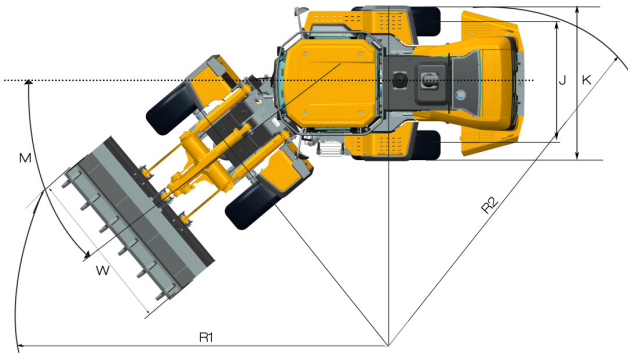

Guangxi Liugong Machinery Co., Ltd.
No. 1 Liutai Road, Liuzhou, Guangxi 545007, PR China
T: +86 772 3886124 E: overseas@liugong.com
www.liugong.com

07/2018 Designed by LiuGong

Specifications and designs are subject to change without notice. Machines shown may include optional equipment.