SWL/SWTL Skid Steer Loader Series Product Size Parameters

Datas \ Model				SWL2810	SWL2811	SWL2820	SWL3210	SWL3220	SWL4018	SWTL4518
Dimension(LxBxH)			in	128.4x63.0x79.4	130.6x63.0x79.3	130.6x63.0x79.3	143.7x72.0x81.4	143.7x72.0x81.4	145.1x79.3x82.6	144.1x79.3x83.9
OPERATING PARAMETERS	A	Max. operating altitude	in	151.6	151.6	151.6	158.3	158.3	161.7	161.7
	B	Height to bucket hinge pin	in	118.2	118.2	118.2	123.0	123.0	126.4	126.4
	C	Height to top of cab	in	79.4	79.3	79.3	81.4	81.4	82.6	83.9
	D	Height to bottom of level bucket	in	111.6	111.6	111.6	116.1	116.1	119.4	119.4
	E	Overall length without attachment	in	97.4	102.5	102.5	116.1	116.1	115.2	113.7
	F	Overall length with standard bucket	in	128.4	130.6	130.6	143.7	143.7	145.1	144.1
	G	Max. height of the unloaded angle	°	42	42	42	43	43	43	43
	H	Dumping height	in	91.3	91.3	91.3	94.3	94.3	96.6	96.6
	J	Dumping reach	in	18.7	18.7	18.7	24.6	24.6	34.5	36.4
	K	Bucket on the ground of the flip angle	°	30	30	30	30	30	30	30
	L	Bucket at the highest flip angle	°	97	97	97	93	93	92	92
	M	Wheelbase	in	38.9	38.9	38.9	43.9	43.9	48.5	63.0
	P	Ground clearance	in	7.5	7.5	7.5	8.1	8.1	8.1	9.3
	Q	Angle of departure	°	25	25	25	27	27	28	36
	R	Without the attachments before turning radius	in	46.0	48.6	48.6	52.8	52.8	53.7	56.7
	S	Before turning radius	in	76.9	76.9	76.9	85.8	85.8	88.4	90.1
	T	After turning radius	in	60.4	60.3	60.3	66.9	66.9	68.9	65.9
	U	Tail length	in	37.8	40.2	40.2	44.2	44.2	41.9	31.6
	V	Wheel spacing (track center distance)	in	50.9	50.9	50.9	58.1	58.1	59.1	60.2
	W	Bucket width	in	63.0	63.0	63.0	72.0	72.0	79.3	79.3

SWL Series

SWL2810
SWL2811
SWL2820
SWL3210
SWL3220

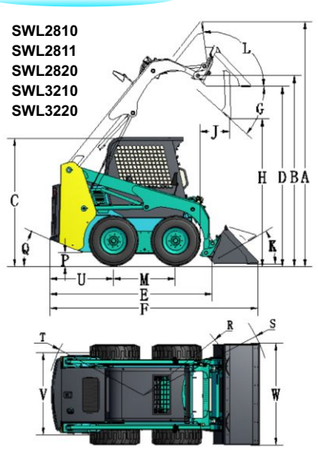

SWL4018

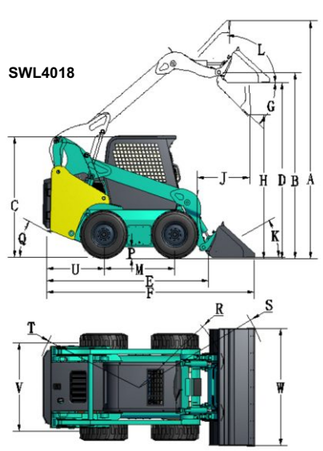

SWTL Series

SWTL4518

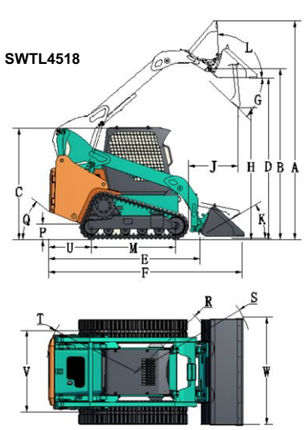

SWL/SWTL Skid Steer Loader Series Product Performance Parameters

Datas \ Model			SWL2810	SWL2811	SWL2820	SWL3210	SWL3220	SWL4018	SWTL4518
PERFORMANCE	Total weight	lb	6134	6244	6244	7392	7392	8826	10062
	Loading capacity	lb	1655	1655	1655	2207	2207	3310	3310
	Tipping load	lb	3310	3310	3310	4413	4413	6620	9455
	Bucket breakout force lift	lb	4413	4413	4413	5472	5472	7613	7613
	Boom breakout force lift	lb	4192	4192	4192	5362	5362	6620	6620
	Max. traveling speed	mph	8.5	8.1	8.1	7.8	7.8	6.2/12.4 (Double speed)	4.3/6.8 (Double speed)
	Bucket capacity	ft^3	14.1	14.1	14.1	18.7	18.7	23.6	23.6
ENGINE	Brand		Yanmar	Xinchai	KUBOTA	KUBOTA	KUBOTA	KUBOTA	KUBOTA
	Model		4TNV84T	C490BG	V2403-M-T	V3300DI	V3307-DI-T	V3800DI-T	V3800DI-T
	Type		4-cylinder, water-cooled, diesel engine						
	Emission standards		EPA Tier2/ EU Stage II	China Stage II	EPA Tier4/ EU Stage III	EPA Tier2/ EU Stage II	EPA Tier4/ EU Stage III	EPA Tier3/ EU Stage III	EPA Tier3/ EU Stage III
	Power	hp	53.5	49.3	55.9	73.6	74.3	99.2	99.2
	Max. torque	lb·ft	118.4	115.1	120.7	180.0	195.5	239.7	239.7
TRANSMISSION SYSTEM	Type		Hydrostatic closed circuit						
	Main pump		2xVariable displacement piston pump						
	Motor		2xRadial piston quantitative motor					2xRadial piston two variable motor	2xRadial piston two variable motor+Reducer
HYDRAULIC SYSTEM	Type		Throttling system						
	Pump		Gear pump						
	Max. flow	gpm	17.8+8.3	17.8	17.8+8.3	21.1+11.6	21.1+11.6	23.8+18.2	21.1+11.6
	Max. pressure	psi	3045	3045	3045	3045	3045	3045	3045
	Control valve		Three joint multi-way valve						
	Control mode		ISO model of pilot control						
ELECTRICAL SYSTEM	Starting motor	V/kW	12/2.3	12/3.0	12/2.0	12/3.0	12/3.0	12/3.0	12/3.0
	Alternator	V/A	12/55	12/40	12/40	12/45	12/80	12/80	12/80
	Battery	Ah	80	80	80	100	100	100	100
FILLING QUANTITY	Hydraulic oil tank	gal	13.2	9.2	9.2	9.2	9.2	17.2	17.2
	Fuel oil tank	gal	18.5	19.8	19.8	22.5	22.5	23.8	23.8
	Sprocket oil tank	gal	6.3	6.3	6.3	6.9	6.9	7.9	——
	Engine oil	gal	2.0	1.7	2.5	3.5	2.9	3.5	3.5
	Sprocket oil tank	gal	2.0	2.4	2.1	2.2	2.2	2.6	2.6
RUNNING CONFIGURATION	Tire size		10-16.5	10-16.5	10-16.5	12-16.5	12-16.5	12-16.5-12RP	——
	Track size		——	——	——	——	——	——	450x84x57