ATTACHMENTS

CRAVE FLEXIBILITY? GEHL RT SERIES TRACK LOADERS ARE THE PERFECT SOLUTION.

Compatible with most allied loader attachments, the RT Series Track Loaders from Gehl provide superior loader functionality while minimizing damage to ground surfaces. Perfect for landscape, agriculture, construction or rental - these machines are up for any challenge.

BEST SELLERS LIST

● Available accessories

		RT165	RT175 GEN:3	RT210 GEN:3	RT250 GEN:3	VT320
AUGERS - CHAIN DRIVE						
	1650 CL Auger Drive - Round - 2 9/16" (65 mm)	Std. Flow	Std. Flow	Std. Flow	Std. Flow	
	1650 CLH Auger Drive - Hex - 2" (51 mm)	Std. Flow	Std. Flow	Std. Flow	Std. Flow	
AUGERS - PLANETARY DRIVE						
	PA 210 Planetary Auger Drive - Round - 2 9/16" (65 mm)	Std. Flow	Std. Flow	Std. Flow	Std. Flow	Std. Flow
	PA 220H Planetary Auger Drive - Hex - 2" (51 mm)	Std. Flow	Std. Flow	Std. Flow	Std. Flow	Std. Flow
AUGERS - BITS						
	SQ 9" (229 mm) Auger Bit - Round - 4 teeth - 2 9/16" (65 mm)	●	●	●	●	●
	SQ 12" (305 mm) Auger Bit - Round - 4 teeth - 2 9/16" (65 mm)	●	●	●	●	●
	SQ 9" (229 mm) Auger Bit - Hex - 4 teeth - 2" (51 mm)	●	●	●	●	●
	SQ 12" (305 mm) Auger Bit - Hex - 4 teeth - 2" (51 mm)	●	●	●	●	●
	SQ 18" (457 mm) Auger Bit - Hex - 6 teeth - 2" (51 mm)	●	●	●	●	●
BRUSH MOWER						
	Standard Flow Rotary Bruch Mowers - 48", 60", 66", 72", 78"	Std. Flow	Std. Flow	Std. Flow	Std. Flow	Std. Flow
	High Flow Rotary Brush Mowers - 72", 78", 90"	High Flow	High Flow	High Flow	High Flow	High Flow
PALLET FORKS						
	Pallet Fork Frame - Heavy Duty - Requires two tines *Can customize with dealer name (on orders of 10 or more)*	●	●	●	●	●
	Heavy Duty Class II Tine 48" (1219 mm)	●	●	●	●	●
	Side Shift pallet Fork with 48" (1219 mm) Tines	Std. Flow	Std. Flow	Std. Flow	Std. Flow	Std. Flow
	Sliding Tine Pallet with 48" (1219 mm) Hydraulic Sliding Tines	Std. Flow	Std. Flow	Std. Flow	Std. Flow	Std. Flow
LOG GRAPPLES						
	Log Grapple	Std. Flow	Std. Flow	Std. Flow	Std. Flow	Std. Flow
GRADER BLADES						
	8" (203 mm) Grader Blade with proportional current valve	Std. Flow	Std. Flow	Std. Flow	Std. Flow	Std. Flow
RAKES						
	76" (1930 mm) Auto Rake	Std. Flow	Std. Flow	Std. Flow	Std. Flow	Std. Flow
	82" (2083 mm) Grader Rake	Std. Flow	Std. Flow	Std. Flow	Std. Flow	Std. Flow
	76" (1930 mm) Preparator Rake	Std. Flow	Std. Flow	Std. Flow	Std. Flow	Std. Flow
	90" (2286 mm) Power Rake with hydraulic angle	Std. Flow	Std. Flow	Std. Flow	Std. Flow	Std. Flow
MULCHER						
	48" (1219 mm) Brush Mulcher	Std. Flow	Std. Flow	Std. Flow		
ROCK WHEEL						
	Rock Wheel with 4.5" (114 mm) wheel, Dual Circuit		High Flow	High Flow	High Flow	High Flow

A WIDE VARIETY OF EDGE ATTACHMENTS ARE AVAILABLE FROM YOUR GEHL DEALER.

EDGE®

GET ATTACHED

ALL-TACH®

All models feature the easy-to-use All-Tach® (universal-style) attachment mounting system compatible with most allied attachments.

- **SINGLE LEVER DESIGN** for simplicity and strength.
- **HEAVY DUTY MOUNTING PLATE** design for increased rigidity over tube style.

POWER-A-TACH®

Power-A-Tach® all-weather system option allows users to quickly install and remove attachments. An operator leaves the seat only to connect auxiliary hydraulics. This system is compatible with most allied attachments.

To learn more about EDGE® Track Loader attachments, please visit
edgeattach.com

○ STANDARD ● OPTIONAL

	RT165	RT175 GEN:3	RT210 GEN:3	RT250 GEN:3	VT320
PERFORMANCE					
All-Tach® Mounting System	○	○	○	○	○
IdealTrax™ Automatic Track Tensioning System	○	○	○	○	○
Straight Tracking		○	○	○	
Power-A-Tach® Mounting System	●	●	●	●	●
Selectable Self-Leveling Lift Action *(Self-Level standard)*	●	●	●	●	●
Two-speed Hydrostatic Drive System	○	○	○	○	○
Horsepower Management System		○	○	○	
ENGINE					
Engine Alert System with Error Display	○	○	○	○	○
Engine Automatic Shutdown System	○	○	○	○	
Glowplugs Starter Assist	○	○	○	○	○
Dual-Element Air Cleaner with Indicator	○	○	○	○	○
ECO Mode					○
HYDRAULICS					
Auxiliary Hydraulics	○	○	○	○	○
High-Flow Auxiliary Hydraulics	●	●	●	●	●
UNDERCARRIAGE					
Elevated Planetary Final Drives	○	○	○	○	○
Maintenance Free Dual and Triple Flange Rollers Each Side	3	3	4	4	4
Single Flange Front/Dual Flange Rear Idlers	○	○	○	○	○
Rubber Track Undercarriage System	○	○	○	○	○
Servo-Controlled Hydrostatic Drive	○				
Dedicated Undercarriage		○	○	○	○
STRUCTURE					
Tilt-out Foot Pod		○	○	○	○
Back-up Alarm	●	○	○	○	○
Combination Radiator & Hydraulic Oil Cooler	○	○	○	○	○
ROPS/FOPS Level II Overhead Guard	○	○	○	○	○
Anti-Vandalism Lock Provisions	○	○	○	○	○
Mechanical Lift Cylinder Lock	○	○	○	○	○
OPERATOR STATION					
Pressurized Cab Enclosure with A/C	●	●	●	●	●
IdealAccess™ Fold-Up Door		●	●	●	●
Multi-Function Function Display Screen	○	○	○	○	○
Drive Sensitivity Adjustment		○	○	○	
Electronic Attachment Control - 14-Pin Connector	●	●	●	●	●
Electro-Hydraulic Joystick Controls		○	○	○	
Selectable Control Pattern Configuration (ISO / Dual-Hand)		●	●	●	
Variable Speed Control, Selectable On & Off		●	●	●	
Foot Throttle	○	○	○	○	○
Full-Suspension Seat	○	○	○	○	○
Air Suspension Seat	●	●	●	●	●

GEHL®

SPECIFICATIONS

		RT165	RT175 GEN:3	RT210 GEN:3	RT250 GEN:3	VT320
DIMENSIONS	A. Overall Operating Height – Fully Raised (mm)	157.8" (4008)	168" (4267)	168" (4267)	168" (4267)	169" (4293)
	B. Height to Hinge Pin – Fully Raised (mm)	119.6" (3038)	128" (3251)	128" (3251)	128" (3251)	130" (3302)
	C. Reach – Fully Raised (mm)	25.3" (641)	34.5" (876)	34.5" (876)	34.5" (876)	40.4" (1026)
	D. Dump Angle – Fully Raised	39°	40.2°	39°	41°	41°
	E. Dump Height – Fully Raised (mm)	91.7" (2329)	98" (2489)	98" (2489)	98" (2489)	99.6" (2530)
	F. Maximum Rollback Angle – Fully Raised	98°	102.5°	102.5°	102.5°	90°
	G. Overall Height at ROPS (mm)	77.5" (1969)	83" (2103)	83.1" (2111)	83.1" (2111)	83.1" (2111)
	H. Overall Length w/ Bucket – Std. c-wt. (mm)	126.2" (3205)	144.0" (3658)	148.1" (3762)	157.8" (4008)	159.8" (4059)
	I. Overall Length w/o Bucket – Std. c-wt. (mm)	94.2" (2393)	110.8" (2814)	116.5" (2959)	126.8" (3221)	127.7" (3243)
	J. Specified Height (mm)	64.5" (1638)	67.5" (1715)	67.7" (1720)	67.7" (1720)	76.3"" (1938)
	K. Reach at Specified Height (mm)	22" (559)	31.1" (790)	31.3" (795)	31.3" (795)	29.6" (751)
	L. Dump Angle at Specified Height	73°	75°	75°	75°	68°
	M. Maximum Rollback Angle at Ground	28°	30°	30°	30°	31°
	N. Carry Position (mm)	7.8" (198)	8.2" (208)	8.2" (208)	8.2" (208)	7.8" (199)
	O. Maximum Rollback Angle at Carry Position	28°	31.6°	31.6°	31.6°	31°
	P. Digging Position – Below Ground (mm)	2.1" (53)	+0.9" (23)	+0.6" (16)	+0.5" (13)	+0.74 (19)
	Q. Angle of Departure with Std. c-wt.	28°	30.4°	29.2°	25°	24°
	R. Ground Clearance (mm)	7.3" (185)	13.1" (333)	13.2" (335)	13.2" (335)	12.2" (309)
	S. Track Gauge (mm)	53.4" (1356)	51.7" (1313)	51.7" (1313)	51.7" (1313)	51.7" (1313)
	T. Track Shoe Width (mm)	12.6" (320)	12.6" (320)	17.7" (450)	17.7" (450)	17.7" (450)
	U. Crawler Base (mm)	49.8" (1265)	54.8" (1392)	58.4" (1483)	61.5" (1562)	61.8" (1570)
	V. Overall Width – Less Bucket (mm)	66.0" (1676)	64.4" (1636)	69.5" (1765)	69.5" (1765)	69.5" (1766)
	W. Bucket Width (mm)	66.0" (1676)	65.9" (1674)	73.9" (1877)	83.9" (2131)	83.9" (2131)
	X. Clearance Radius – Front With Bucket (mm)	77.9" (1979)	91.4" (2322)	94.6" (2403)	98.4" (2499)	96.1" (2442)
	Z. Clearance Radius – Rear w/ Std. c-wt. (mm)	56.7" (1440)	62.1" (1577)	64.6" (1641)	70.7" (1796)	73.6" (1870)
	Maximum Rollback at Specified Height	62°	66.8°	66.8°	66.8°	64.5°
	Angle of Approach	90°	90°	90°	90°	90°
	Grouser Height (mm)	1" (25)	1" (25)	1" (25)	1" (25)	1" (25.4)
CAPACITY	Operating Capacity at 35% Tipping Load (kg)	1,650 lbs. (748)	1,750 lbs. (794)	2,100 lbs. (953)	2,500 lbs. (1134)	3,200 lbs. (1452)
	Operating Capacity at 50% Tipping Load (kg)	2,357 lbs. (1069)	2,500 lbs. (1134)	3,000 lbs. (1361)	3,571 lbs. (1620)	4,571 lbs. (2074)
	Tipping Load (kg)	4,715 lbs. (2139)	5,000 lbs. (2268)	6,000 lbs. (2722)	7,143 lbs. (3240)	9,143 lbs. (4148)
	Operating Weight (kg)	8,020 lbs. (3638)	8,605 lbs. (3903)	9,800 lbs. (4445)	11,470 lbs. (5203)	11,610 lbs. (5267)
ENGINE	Make/Model	Yanmar/4TNV98C-NMS2 Tier IV	Yanmar / 4TNV98C-NMSL Tier IV	Yanmar / 4TNV98CT-NMSL Tier IV	Deutz / TD 3.6 Tier IV	Deutz / TD 3.6 EPA Final Tier IV
	Type	4-Stroke Naturally Aspirated	4-Stroke Naturally Aspirated	4-Stroke Turbo	4-Stroke Turbo	4-Stroke Turbo
	Displacement (L) / cylinders	202.5 cu.in./4 (3.3 L)	203 cu.in. (3.3) / 4	203 cu.in. (3.3) / 4	221 cu.in. (3.6) / 4	221 cu.in. (3.6) / 4
	Gross Power (kW) @ rpm	69.3 hp (51.7) @ 2500	69.9 hp (52.1) @ 2500	72 hp (53.7) @ 2500	74.3 hp (55.4) @ 2300	114 hp (85 kW)
	Net Power (kW) @ rpm	68.4 hp (51.0) @ 2500	68.4 hp (51) @ 2500	70.7 hp (52.7) @ 2500	70.7 hp (52.7) @ 2300	108 hp (80.8 kW)
	Peak Torque (Nm) @ rpm	178 ft.-lbs. (241) @ 1625	179 ft.-lbs. (242.7) @ 1600	206 ft.-lbs. (279.3) @ 1700	243 ft.-lbs. (330) @ 1500	339 ft.-lbs. (430 Nm)
	Oil Pan Capacity (L)	9.5 qts. (9)	11 qts. (10.4)	11 qts. (10.4)	9 qts. (8.5)	9 qts. (8.5)
	Alternator Voltage / Amperage	12V / 100A	14V / 95A	14V / 95A	14V / 95A	14V/95A
TRACK DRIVES	Drawbar Pull / Tractive Effort (kg)	9,578 lbs. (4,345)	9,917 lbs. (4498)	11,489 lbs. (5211)	12,770 lbs. (5792)	12,770 lbs. (5792)
	Track Type / Track Rollers / Roller Type	Rubber / 3 / Steel	Rubber / 4 / Steel	Rubber / 5 / Steel	Rubber / 5 / Steel	Rubber/Steel
	Track Width (mm)	12.6" (320)	12.6" (320)	17.7" (450)	17.7" (450)	17.7" (450)
	Ground Pressure (bar)	6.5 / 5.2 psi (.45 / .36)	6.2 psi (0.43)	4.7 psi (0.32)	5.3 psi (0.37)	5.3 psi (.37 bar)
FORCES	Bucket Breakout – Tilt Cylinder (kg)	4,230 lbs. (1,919)	5,354 lbs. (2429)	6,631 lbs. (3008)	8,384 lbs. (3803)	9,901 lbs. (4492)
	Bucket Breakout – Lift Cylinder (kg)	5,060 lbs. (2295)	5,016 lbs. (2275)	6,481 lbs. (2940)	7,437 lbs. (3373)	7,491 lbs. (3398)
	Ground Speed – Single Speed (km/hr)	6.5 mph (10.5)	5.3 mph (8.5)	6.1 mph (9.8)	5.8 mph (9.3)	5.3 mph (8.6)
	Ground Speed – Two Speed (km/hr)	10.0 mph (16.1)	7.7 mph (12.4)	8.9 mph (14.3)	8.2 mph (13.2)	7.8 mph (12.6)
VOLUME	Fuel Tank (L)	16.5 gal. (62.5)	24 gal. (91)	24 gal. (91)	24 gal. (91)	32.5 gal. (123)
	Hydraulic Reservoir Tank (L)	10.3 gal. (39)	11.0 gal. (41.6)	13.8 gal. (52.2)	13.8 gal. (52.2)	16.5 gal. (62.5)
	Coolant Capacity (L)	3.4 gal. (12.9)	3.5 gal. (13.3)	3.8 gal. (14.4)	5.1 gal. (19.3)	5.1 gal. (19.3)
HYDRAULICS	Auxiliary Hydraulic Flow – Rated Speed (L/min)	18.7 gpm (71)	18.5 gpm (70.0)	21.8 gpm (82.5)	24.9 gpm (94.3)	27 gpm (102.2)
	High-Flow Hydraulic Flow – Rated Speed (L/min)	30.1 gpm (114)	34.0 gpm (128.8)	35.9 gpm (135.8)	37.4 gpm (141.6)	37.4 gpm (141.6)
	Transmission Pump Type	Axial Piston	Axial Piston	Axial Piston	Axial Piston	Axial Piston
	Motor Type	Radial Piston		Axial Piston with Planetary Gear Box Reduction		
	Battery Volts	12V	12V	12V	12V	12V
	Cold Cranking Amps at Temperature	950 CCA @ 0°F (-18°C)	850 CCA @ 0°F (-18°C)	850 CCA @ 0°F (-18°C)	950 CCA @ 0°F (-18°C)	950 CCA @ 0°F (-18°C)

OWNER DRIVEN

Gehl authorized dealers offer a full line of compact equipment, backed up by exceptional sales, service and parts experience.

Gehl reminds users to read and understand the operator's manual before operating any equipment. Also, make sure all safety devices and shields are in place and functioning properly.

Gehl reserves the right to add improvements or make changes in specifications at any time without notice or obligation.

For more information on Gehl equipment, visit

gehl.com

REFERENCE DIAGRAMS

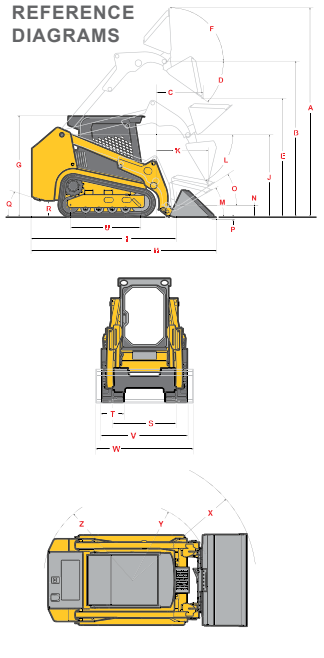

GEHL West Bend, WI 53095 U.S.A. | Tel: 262-334-9461 | Fax: 262-338-7517

Find us on Facebook

GEHL COMPACT EQUIPMENT

© 2017 Manitou Americas, Inc. Gehl. A Manitou Group Brand. All rights reserved. Printed in the U.S.A.