TECHNICAL DATA

	AS 700	AS 900
OPERATING WEIGHT:	5980 KG	6640 KG
ENGINE POWER:	55 KW / 75 HP	55 KW / 75 HP
BUCKET CAPACITY:	0.70 – 1.20 m^3	0.90 – 1.5 M^3

- ZERO-PLAY, CHAIN OPERATED 180° SWING SYSTEM
- COMFORTABLE PANORAMIC DRIVER'S CABIN WITH ROPS SAFETY SYSTEM
- SERVO-ASSISTED JOYSTICK CONTROLS
- HIGH-PERFORMANCE, POWER-CONTROLLED, HYDROSTATIC FOUR-WHEEL DRIVE
- FOUR-WHEEL STEERING SYSTEM WITH AUTOMATIC ALIGNMENT
- PLANETARY AXLES WITH SELF-LOCKING DIFFERENTIAL ON FRONT AXLE
- LOW-MAINTENANCE WET LAMELLA BRAKE
- MONOBOOM WITH Z-KINEMATICS
- INCREASE OF LIFTING POWER BY BOOSTER-KINEMATICS
- HYDRAULICALLY CONTROLLED QUICK-COUPLER WITH ELECTRIC SAFETY FEATURE
- WIDE RANGE OF ATTACHMENTS

ENGINE	AS 700	AS 900
Low-noise, water-cooled Deutz TCD 2,9 L4 turbo diesel engine with intercooler. Common Rail injection system, cooled external exhaust gas recirculation and diesel oxidation catalyst (DOC). No regeneration necessary.	•	•
Net power at	2600 rpm	2600 rpm
acc. to ISO 14396	75 hp / 55 kW	75 hp / 55 kW
Max. torque at	1600 rpm	1600 rpm
acc. to ISO 14396	300 Nm	300 Nm
Air intake filter: 2-level dry-air filter with safety cartridge	•	•
Electrical system: Operating voltage: Battery capacity: Alternator rating:	 12 Volt 95 Ah 120 A	 12 Volt 95 Ah 120 A

TECHNICAL DATA

DRIVE	AS 700	AS 900
Hydrostatic drive with automotive control, 2 stages for maximum propulsive force, shiftable under load, multifunctional lever (joystick) for drive and working hydraulics control	•	•
Axles: planetary axles with four-wheel steering for maximum manoeuvrability, oscillating rear axle with suspension	•	•
Differential lock: self-locking differential in front axle	•	•
Wheels: Tyre size: optional:	 14.5-20 365/80 R20	 14.5-20 405/70 R20
Speeds: Road gear: Field gear:	 0-20 km/h 0-5 km/h	 0-20 km/h 0-5 km/h
Oscillation: max. oscillation angle	+/- 10°	+/- 10°

BRAKES	AS 700	AS 900
Working brakes: 1. hydrostatic inching brake, acting on all 4 wheels	•	•
2. hydraulically operated, servo-assisted wet lamella brake on front axle, acting on all 4 wheels	•	•
Parking brake: hydraulically operated spring loaded brake, acting on all 4 wheels	•	•

STEERING	AS 700	AS 900
Hydrostatic four-wheel steering with 3 steering modes with automatic alignment (four-wheel, rear axle and crab steer)	•	•
max. steering angle	+/- 35°	+/- 35°
Turning radius, measured over: - rear	3450 mm	3450 mm

HYDRAULIC SYSTEM	AS 700	AS 900
Dual–circuit system with gear pumps 1. Working hydraulics circuit (lift/lower, tilt, accessories), and steering (via priority valve); three-way control valve with primary and secondary safeguards	•	•
Max. operating pressure at 2600 rpm:	84 l/min and 240 bar	84 l/min and 240 bar
2. Circuit (swivelling) single control valve with primary and secondary protection	•	•
Max. operating pressure at 2600 rpm:	35 l/min and 220 bar	35 l/min and 220 bar
Float position for lifting cylinders		
Cylinder: 2 lifting cylinders 1 tilting cylinder 2 swing cylinders	80 ø 100 ø 100 ø	90 ø 110 ø 100 ø

PERFORMANCE DATA	AS 700	AS 900
Bucket position:		
Crowd angle	45°	45°
Dump angle top	45°	45°
Dump angle max.	105°	105°
Lifting force:	4600 daN	5800 daN
Lifting force with boost:	6000 daN	7500 daN
Breakout force:	4400 daN	5400 daN
Thrust force:	4500 daN	4500 daN
Tipping load:		
Standard bucket, max. steered, straight	3250 kg	3700 kg
Standard bucket, max. steered, 90°-swivelled	3300 kg	3900 kg
Payload on forks:		
max. steered, frontal, even terrain	1950 kg	2300 kg
max. steered, max. swivelled, even terrain	1950 kg	2300 kg
Tipping load according to ISO 14397; Payload according to EN 474-3		

Engine with filter	approx. 8.0 l	approx. 8.0 l
Fuel tank	approx. 130.0 l	approx. 130.0 l
Front axle total	approx. 11.0 l	approx. 11.0 l
Rear axle with gearbox	approx. 12.0 l	approx. 12.0 l
Hydraulic system with tank	approx. 134.0 l	approx. 134.0 l

CHASSIS	AS 700	AS 900
Rigid, single-frame chassis with rear axle support for maximum stability, especially when working in swivelled position	•	•
Sealed articulated/oscillated pivot with play-free, chain operated swinging system with constant turning speed and power	•	•
Innovative, slender booster boom with protected, internal kinematics as well as collision save internal lines, hoses and electrics	•	•
Standard electro-hydraulic quick-coupler with exact parallel guidance feature	•	•
The slender monoboom allows maximum utilization of the swing area and excellent visibility on working attachments	•	•
Operator's cab with flexible four-point mountings for maximum driver comfort and minimum noise levels	•	•
The servo-assisted joystick controls are smooth, accurate and long lasting	•	•

TECHNICAL DATA

STANDARD FEATURES	AS 700	AS 900
Amply dimensioned ROPS panoramic comfort cabin with removable cabin top. The driver's door, which opens through 180°, and the large wide-opening side window can be locked within the machine contour.	•	
Amply dimensioned ROPS panoramic comfort cabin with 2 lockable doors		•
Doors can be locked in 2 positions within the contour of the loader.		•
Single piece floor mat for easy cleaning	•	•
Tinted windows	•	•
Parallel guided windscreen wiper	•	•
Rear wiper	•	•
Front and rear screen washing device	•	•
Heated rear window	•	
Heated rear window on full surface		•
2 large fold away outside mirrors	•	•
Tinted roof window	•	•
Steering column is adjustable in inclination	•	
Steering column is adjustable in height and inclination		•
Ergonomically adjustable joystick	•	•
Multiply adjustable driver's seat	•	•
Safety belt	•	•
Sun visor	•	•
Heating and ventilation system with fresh air filter	•	
Heating and ventilation system with recirculation air function		•
Interior light	•	•
12 V socket	•	•
Coat hook		•
Storage pockets in the cabin	•	•
Storage box with lid	•	•
Lockable storage compartment at the chassis	•	•
Central multifunctional display	•	•
2 driving lights on cabin roof	•	•
2 working lights at monoboom	•	•
Single key system	•	•
Hydraulic quick coupler with electric safety device	•	•
Towing coupling	•	•
Fastening and lifting points	•	•
Proportional 1st auxiliary hydraulics circuit is integrated in the joystick	•	•
Color scheme: yellow	•	•
Operator's cabin, axles and wheels: grey	•	•

OPTIONAL EQUIPMENT	AS 700	AS 900
30 or 40 km/h version	o	o
Wide tires	o	o
Beacon light	o	o
Interior mirror	o	o
Acoustic back up alarm	o	o
FOPS grid for cabin roof	o	o
Bucket protection cover compliant to road-safety standards	o	o
2nd auxiliary hydraulics		o
Permanent function for auxiliary hydraulics	o	o
High performance hydraulic	o	o
Safety valves	o	o
Boom suspension	o	o
Bio-degradable oil fill for hydraulic system	o	o
Pressureless return line	o	o
Inching speed	o	o
Lockable differential on rear axle	o	o
Sliding windows right and left		o
Air-conditioning system		o
Air suspended driver's seat	o	o
Radio	o	o
Heated outside mirrors		o
Main battery switch	o	o
Immobilizer	o	o
2 working lights rear	o	o
Trailer coupling	o	o
Rear mounting bracket for sand/salt spreader	o	o
Special corrosion protection for salt applications	o	o
Attachments as per separate list as pallet fork, load hook etc.	o	o

EMISSIONS	AS 700	AS 900
Engine: Emissions according to stage III - EU-RL 97/68	•	•
Noise emission		
Sound power level LWA[1]	99 dB(A)	99 dB(A)
Acoustic power level LpA[2]	72 dB(A)	72 dB(A)
Vibrations:		
Vibration total value[3]	< 2,5 m/s²	< 2,5 m/s²
Effective vibration level[4]	< 0,5 m/s²	< 0,5 m/s²

[1] According to 2000/14/EG
[2] According to ISO 6396
[3] According to ISO/TR 25398
[4] According to ISO/TR 25398

TECHNICAL DATA

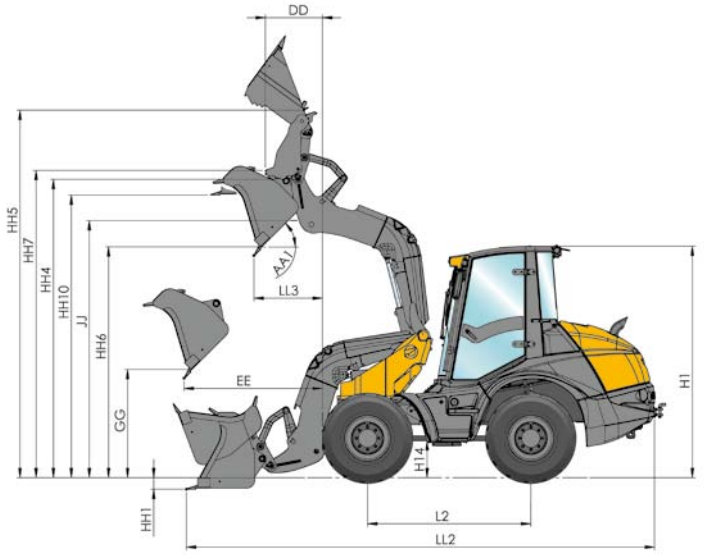

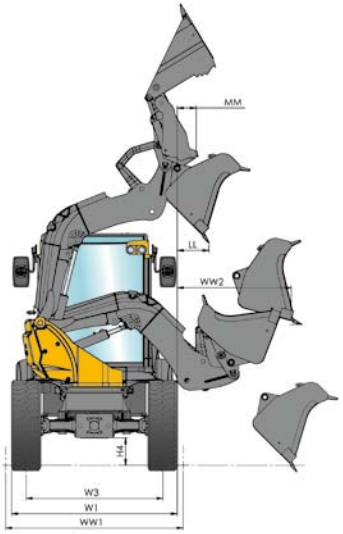

AS 700	BUCKETS STD. 0.70 m³	4x1 0.65 m³
AA1	49°	46°
DD		920
EE	1630	1750
GG	1020	1070
H1	2760	2760
H4	390	390
H14	440	440
HH1	130	85
HH4	3500	3500
HH5	4520	4500
HH6	2720	2700
HH7	3280	3270
HH10	3230	3210
JJ	3130	3120
L2	1980	1980
LL	730	730
LL2	5550	5520
LL3	910	910
MM		720
W1	1950	1950
W3	1590	1590
WW1	1950	1950
WW2	1460	1380

AS 900	BUCKETS STD. 0.90 m³	4x1 . 0.85 m³
AA1	49°	46°
DD		920
EE	1660	1750
GG	940	1000
H1	2830	2830
H4	390	390
H14	440	440
HH1	150	110
HH4	3500	3500
HH5	4490	4470
HH6	2650	2600
HH7	3280	3270
HH10	3230	3210
JJ	3130	3120
L2	1980	1980
LL	740	740
LL2	5590	5560
LL3	940	1010
MM		650
W1	1990	1990
W3	1660	1660
WW1	2100	2100
WW2	1470	1390

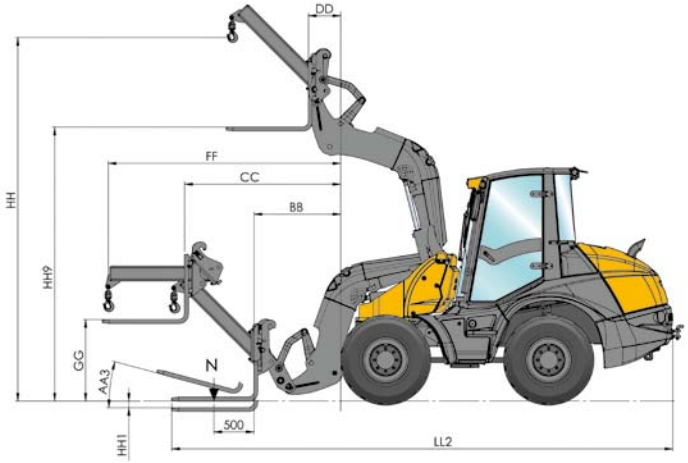

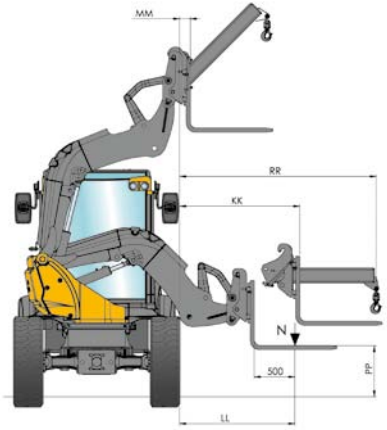

AS 700	FORKS	LOAD HOOK
AA3	19°	
BB	1030	
CC	1460	
DD	740	
FF		3010
GG	1460	
HH		4520
HH1	150	
HH9	3190	
KK	1090	
LL	1510	
LL2	6160	
MM	380	
PP	880	
RR		2630

AS 900	FORKS	LOAD HOOK
AA3	19°	
BB	1050	
CC	1480	
DD	760	
FF		3030
GG	1440	
HH		4500
HH1	170	
HH9	3170	
KK	1010	
LL	1430	
LL2	6160	
MM	300	
PP	810	
RR		2560

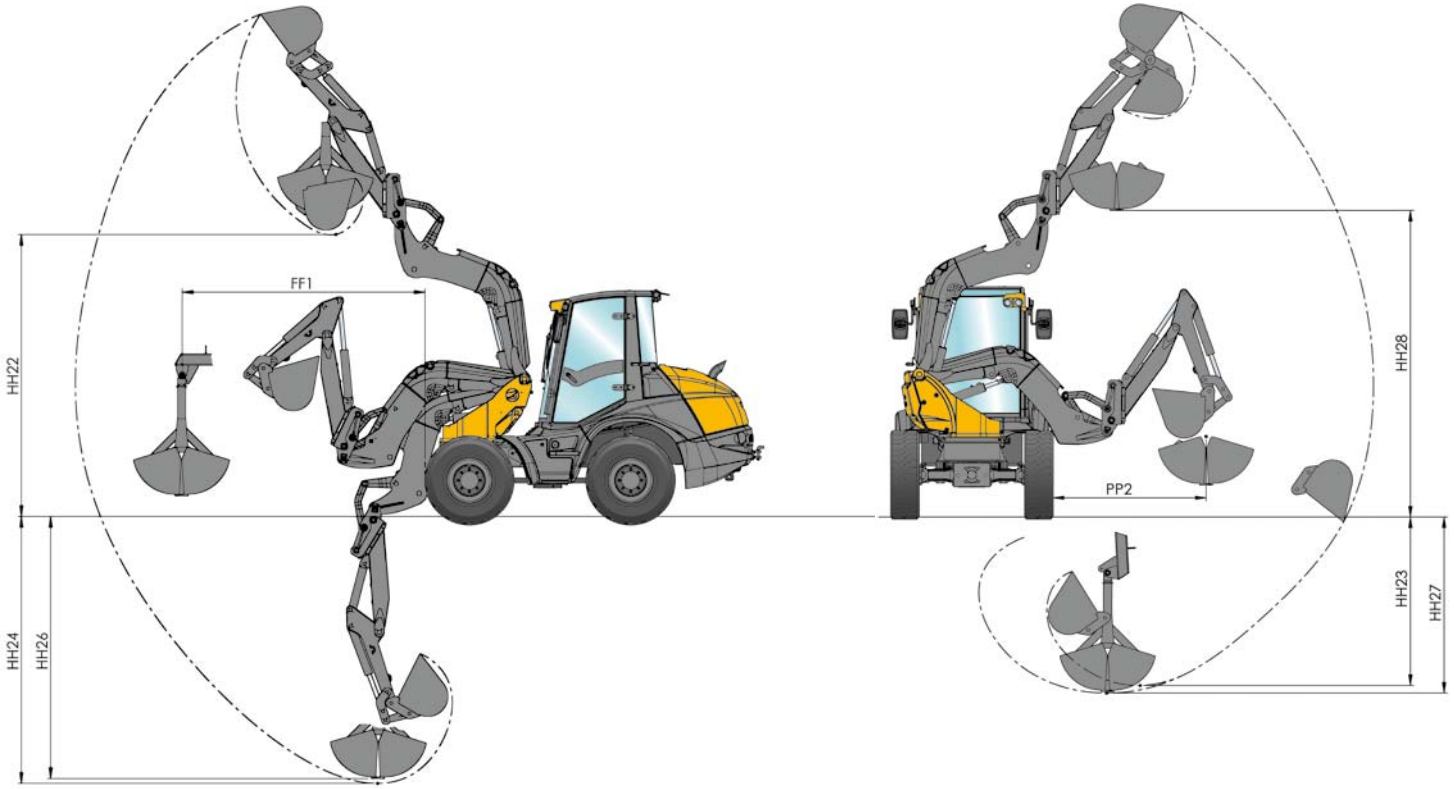

AS 900		
	EXCAVATOR	GRAB
FF1		2930
HH22	3330	
HH23	2020	
HH24	2660	
HH26		2680
HH27		1980
HH28		3140
PP2		2130

All data based on standard tires.
All data are non-binding.
Changes are reserved without notice.
The order confirmation is exclusively decisive.