50G

Engine	**50G**			
Manufacturer and Model	Yanmar 4TNV88C			
Non-Road Emission Standard	EPA Final Tier 4/EU Stage IV			
Displacement	2.19 L (134 cu. in.)			
Net Power (ISO 9249)	26.8 kW (35.9 hp) at 2,400 rpm			
Powertrain				
Each track independently driven by hydrostatic axial-piston motor connected to 2-stage planetary gear-reduction box				
Maximum Travel Speed				
Low	2.5 km/h (1.6 mph)			
High	4.2 km/h (2.6 mph)			
Hydraulics				
Closed-center load sensing with 1 variable-displacement pump				
Pump Flow	120.0 L/m (31.7 gpm)			
Auxiliary Flow	87.4 L/m (23.1 gpm)			
Controls	Hydraulic pilot-operated controls for boom, arm, bucket, swing, boom swing, blade, travel, and auxiliary functions			
Electrical				
Alternator Rating	55 amp			
Work Lights	2 halogen: 1 mounted on operator's station and 1 mounted on boom			
Undercarriage				
Track, Rubber	400 mm (16 in.)			
Ground Pressure	*1380-mm (4 ft. 6 in.) Standard Arm, Canopy, and Standard Counterweight*	*1380-mm (4 ft. 6 in.) Standard Arm, Cab, and Standard Counterweight*	*1690-mm (5 ft. 7 in.) Long Arm, Canopy, and Extra Counterweight*	*1690-mm (5 ft. 7 in.) Long Arm, Cab, and Extra Counterweight*
With Rubber Track	26.9 kPa (3.90 psi)	28.3 kPa (4.10 psi)	28.8 kPa (4.17 psi)	29.5 kPa (4.28 psi)
Upperstructure				
Swing Speed	9.0 rpm			
Independent Swing Boom				
Left	80 deg.			
Right	60 deg.			
Swing Brake	Spring applied, hydraulically released, automatic, disc type			
Serviceability				
Refill Capacities				
Fuel Tank	70 L (18.5 gal.)			
Cooling System	5.0 L (5.3 qt.)			
Engine Oil with Filter	8.6 L (9.1 qt.)			
Hydraulic Tank	56 L (14.8 gal.)			
Operating Weights				
	1380-mm (4 ft. 6 in.) Standard Arm, Canopy, and Standard Counterweight	*1380-mm (4 ft. 6 in.) Standard Arm, Cab, and Standard Counterweight*	*1690-mm (5 ft. 7 in.) Long Arm, Canopy, and Extra Counterweight*	*1690-mm (5 ft. 7 in.) Long Arm, Cab, and Extra Counterweight*
With 400-mm (16 in.) Rubber Track, Straight Blade, Full Fuel Tank, and 79-kg (175 lb.) Operator	4790 kg (10,560 lb.)	4920 kg (10,847 lb.)	5018 kg (11,063 lb.)	5148 kg (11,349 lb.)
Optional Angle Blade	409 kg (902 lb.)			
Counterweight				
Standard	700 kg (1,543 lb.)			
Additional	200 kg (441 lb.)			

Operating Dimensions	50G			
	1380-mm (4 ft. 6 in.) Standard Arm and Canopy	*1690-mm (5 ft. 7 in.) Long Arm and Canopy*	*1380-mm (4 ft. 6 in.) Standard Arm and Cab*	*1690-mm (5 ft. 7 in.) Long Arm and Cab*
A Maximum Cutting Height	5.75 m (18 ft. 10 in.)	6.00 m (19 ft. 8 in.)	5.75 m (18 ft. 10 in.)	6.00 m (19 ft. 8 in.)
B Maximum Dumping Height	4.07 m (13 ft. 4 in.)	4.31 m (14 ft. 2 in.)	4.07 m (13 ft. 4 in.)	4.31 m (14 ft. 2 in.)
C Maximum Digging Depth	3.53 m (11 ft. 7 in.)	3.83 m (12 ft. 7 in.)	3.53 m (11 ft. 7 in.)	3.83 m (12 ft. 7 in.)
D Maximum Digging Reach	5.96 m (19 ft. 7 in.)	6.26 m (20 ft. 6 in.)	5.96 m (19 ft. 7 in.)	6.26 m (20 ft. 6 in.)
E Minimum Front Swing Radius	2.21 m (7 ft. 3 in.)	2.30 m (7 ft. 7 in.)	2.21 m (7 ft. 3 in.)	2.30 m (7 ft. 7 in.)
F Transport Length	5.47 m (17 ft. 11 in.)	5.52 m (18 ft. 1 in.)	5.47 m (17 ft. 11 in.)	5.52 m (18 ft. 1 in.)
Digging Force (ISO)				
Arm	24.0 kN (5,401 lb.)	21.0 kN (4,718 lb.)	24.0 kN (5,401 lb.)	21.0 kN (4,718 lb.)
Bucket	36.8 kN (8,267 lb.)	36.8 kN (8,267 lb.)	36.8 kN (8,267 lb.)	36.8 kN (8,267 lb.)
Machine Dimensions				
G Upperstructure Width	1.85 m (6 ft. 1 in.)			
H Overall Height				
Canopy	2.53 m (8 ft. 4 in.)			
Cab	2.53 m (8 ft. 4 in.)			
I Track Width	400 mm (16 in.)			
J Undercarriage Width	2.00 m (6 ft. 7 in.)			
K Ground Clearance	340 mm (13 in.)			
L Tail Swing Radius				
With Standard Arm	1.00 m (39 in.)			
With Long Arm and Extra Counterweight	1.10 m (43 in.)			
M Engine Cover Height	1.59 m (5 ft. 3 in.)			
N Maximum Blade Lift Above Ground	460 mm (18 in.)			
O Maximum Blade Drop Below Ground	360 mm (14 in.)			
Blade				
Width	2.00 m (6 ft. 7 in.)			
Height	375 mm (15 in.)			
P Sprocket Center to Idler Center	2.00 m (6 ft. 7 in.)			
Q Track Length	2.50 m (8 ft. 2 in.)			
R Counterweight Clearance	610 mm (24 in.)			

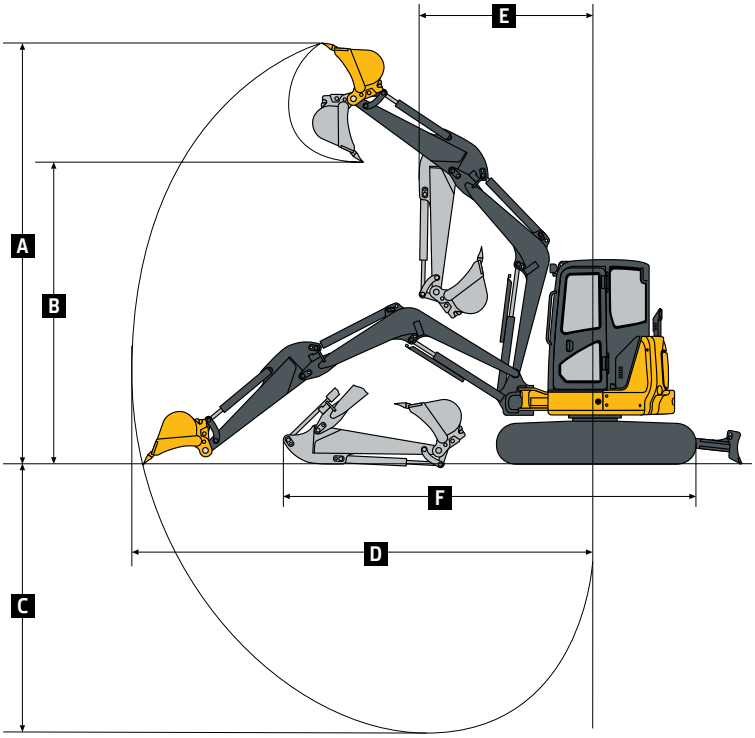

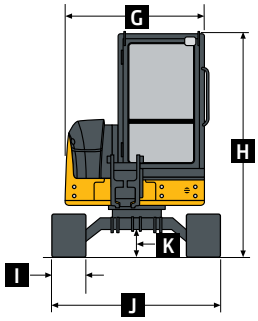

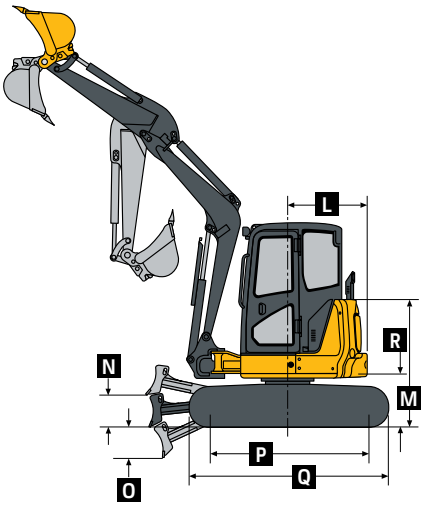

Lift Capacities								
Ground Level at 3.05-m (10 ft.) Radius	*Canopy and Standard Counterweight*		*Canopy and Extra Counterweight*		*Cab and Standard Counterweight*		*Cab and Extra Counterweight*	
Arm	*Over Front**	*Over Side*	*Over Front**	*Over Side*	*Over Front**	*Over Side*	*Over Front**	*Over Side*
1380-mm (4 ft. 6 in.) Standard	2511 kg (5,531 lb.)	1110 kg (2,444 lb.)	2511 kg (5,531 lb.)	1232 kg (2,714 lb.)	2511 kg (5,531 lb.)	1150 kg (2,534 lb.)	2511 kg (5,531 lb.)	1273 kg (2,803 lb.)
1690-mm (5 ft. 7 in.) Long	2477 kg (5,456 lb.)	1088 kg (2,396 lb.)	2477 kg (5,456 lb.)	1210 kg (2,666 lb.)	2477 kg (5,456 lb.)	1129 kg (2,486 lb.)	2477 kg (5,456 lb.)	1251 kg (2,755 lb.)

*Blade down (limited by hydraulics).