DYNAPAC

Part of the Atlas Copco Group

CA300D

Single drum vibratory rollers

Technical data

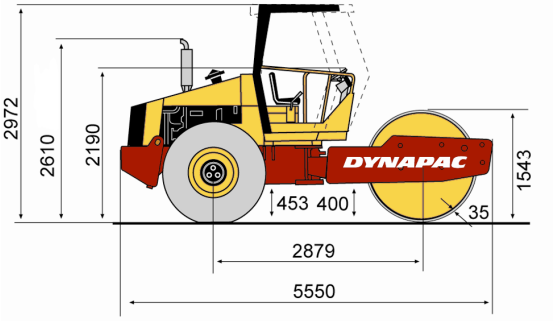

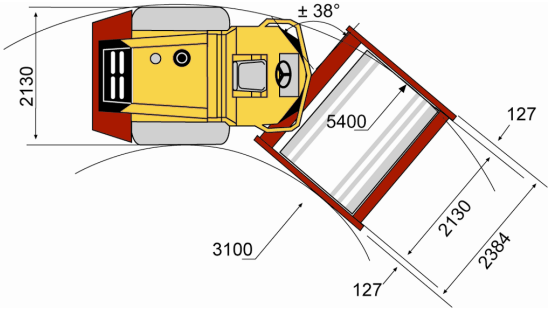

Masses	CA300D
Max. operating mass	13,800 kg
Operating mass (incl. ROPS)	12,550 kg
Front module mass	8,100 kg
Module mass (front/ rear)	8,100/ 4,450 kg
Traction	
Speed range (km/ h)	0-5
Theor. gradeability	55 %
Tyre size (8 ply)	23,1x26
Vertical oscillation	±9°
Compaction	
Centrifugal force (high/ low amplitude)	300/ 146 kN
Nominal amplitude (high/ low)	1.7/ 0.8 mm
Static linear load	38.0 kg/ cm
Vibration frequency (high/ low amplitude)	33/ 33 Hz
Engine	
Manufacturer/ Model	Cummins 4BTA 3.9C (*)
Type	Water cooled turbo Diesel with After Cooler
Rated power	82 kW
Rated power	110.0 hp
Rated power @	2,200 rpm
Fuel tank capacity	250 l
Rated power, SAE J1995	82 kW (110.0 hp) @ 2,200 rpm
Hydraulic system	
Vibration	Axial piston pump with variable displacement. Axial piston motor with constant displacement.
Driving	Axial piston pump with variable displacement. Axial piston motor with constant displacement. Radial piston motors with constant displacement (D, PD).
Steering	Gear pump with constant displacement.
Service brake	Hydrostatic in forward and reverse lever.
Parking/ Emergency brake	Failsafe multidisc brake in rear axle.
Notes	
(*)	For sales outside ECC countries only

Find your local dealer at www.dynapac.com

We reserve the right to change specifications without notice. Photos and illustrations do not always show standard versions of machines.
The above information is a general description only, all informations are supplied without liability.

ca300d_en-20100803.130341.pdf 2010-08-03 13:03